A Dynamic EMG-torque Model of Elbow Based on Neural Networks

Liang Peng, Zeng-Guang Hou, Weiqun Wang

***Abstract*— In this paper, a dynamic EMG-torque model of the elbow joint is developed based on ANN, and two novel test methods are proposed to validate its generalization performance. A time-delay neural network (TDNN) model is built and proved to have less risk of overfitting than the most-used multilayer feedfoward neural network (MFNN) model for dynamic EMG-torque modeling. Both EMG and kinematic features are included in the input of ANN, but the zero-EMG test shows that the trained ANN is part of the inverse joint dynamics rather than the EMG-torque model, and some random samples for ANN training are added to overcome this problem. The single-muscle test shows that an inappropriate choice of the motion type may cause the model to estimate wrong torque directions. After tuning and testing, the root mean square error (RMSE) across all subjects is 0.60±0.20 N.m.**

I. Introduction

Electromyography (EMG) reflects the muscle activities, and is very promising in human-machine interfaces (HMIs) and other applications. EMG signals are mapped to the movements through muscle activation dynamics, muscle contraction dynamics, joint geometry, and joint dynamics [1], where the joint geometry represents the corresponding moment arm of each muscle. Meanwhile, muscle contraction dynamics is influenced by the joint angle and angular velocity through the force-length (F-L) and force-velocity (F-V) relationships, and muscle moment arms also depend on joint angles [2].

Previous studies showed that ANN models could fit the training samples with small errors, but few of them considered the overfitting problem, which limited their implementations. This pilot study develop a novel dynamic EMG-torque model using ANN, and three factors that influence the model's generalization performance are discovered and studied during several tests.

1) *Structure of the ANN model*. In this study, we compared two types of neural networks -multilayer feedforward neural networks (MFNNs) [3] and time delay neural network (TDNN), and the performance of the MFNN model and the TDNN model for dynamic EMG-torque modeling are compared.

2) *Inclusion of the kinematic features*. Joint angles and angular velocities can influence the dynamic relationship between EMG and the joint torques[4]. In this study, however, the trained ANN model is proved to be part of the inverse joint dynamics rather than the EMG-torque model. In order to overcome this problem, some random samples are generated and used for ANN training together with the experimental samples we acquired.

3) *Motion type for the sample acquisition*. In this study, the training samples are acquired during the elbow flexion/extension in two motion types, and two ANN models are trained with these samples respectively. A single-muscle test is performed, and one of the models estimates wrong torque directions most of the time, while the other model is as ideal as expected. The effect of these motion types on the ANN training is analyzed in the end.

*This research is supported in part by the National Natural Science Foundation of China (Grants 61225017, 61175076, 61203342), and the International S&T Cooperation Project of China (Grant 2011DFG13390).

The authors are with The State Key Laboratory of Management and Control for Complex Systems, Institute of Automation, Chinese Academy of Sciences, Beijing 100190, China Emails:{liang.peng, zengguang.hou, weiqun.wang}@ia.ac.cn

II. Methods

A. Experimental Setup

The experimental procedures involving human subjects described in this paper were approved by the Institutional Review Board. Four healthy volunteers (males, age: 23-27) participated in this experiment, and Fig. 1 shows the experimental setup. In this study, we acquired the elbow flexion/extension samples from two motion types as shown in Fig. 1(a) (motion type 1) and Fig. 1(b) (motion type 2). These two motion types were almost the same, except that the subjects' upper arms kept vertical to the ground in motion type 1, and kept parallel to the ground in motion type 2. The subjects were instructed to perform repeated elbow flexion/extension in the sagittal plane, and the elbow angles ranged from 0 (full extension) to about 140 degrees (full flexion).

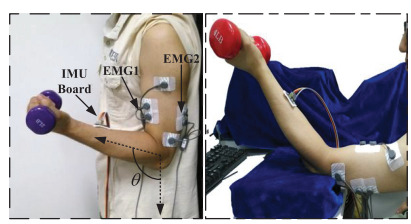

(a) (b)

Fig. 1. Experimental setup and definition of joint angle (θ).

In order to acquire samples under different muscle contractile conditions, two loads (2 lb, 4 lb) were tested under low speed (about 3 s/cycle), medium speed (about 2 s/cycle) and high speed (about 1 s/cycle). So each subject had to accomplish 2×3 trails under each motion type, and each trail was repeated 5 to 10 times, and there was a short rest (1 minute) between trails to avoid muscle fatigue.

B. Data Recording and Processing

As shown in Fig. 1, a two-channel sEMG preamplifier (by Noraxon, USA) was used to capture and amplify the sEMG

signals from biceps brachii and triceps brachii. The sEMG signals were amplified 1000 times and band-pass filtered by 10-500 Hz filters.

At the same time, an inertial measurement unit (IMU) board was used to record the movements of the forearm. After filtering, both the sEMG signals and IMU outputs were saved in the computer using a 16-bit DAQ card (USB6211 by NI, USA) at a sample rate of 2 kHz.

The raw sEMG outputs were full-wave rectified and passed a 3 Hz low-pass filter. On the other hand, a complementary filter [5] was used to estimate the joint angles and angular velocities based on the IMU outputs. Then both the EMG amplitude signals and kinematic data were averaged over 50 ms moving windows.

Then the EMG amplitude signals were normalized to the EMG amplitude of maximal voluntary contraction (MVC), and the result of data processing is shown in Fig. 2.

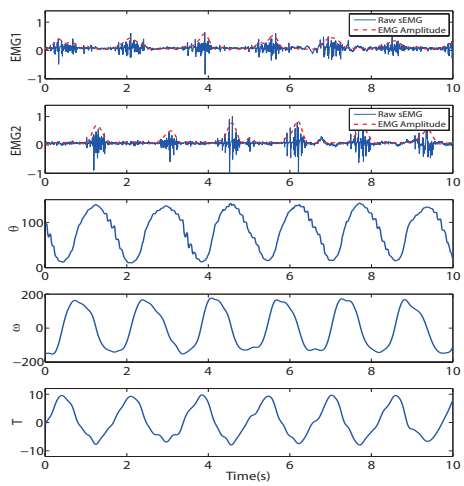

Fig. 2. Result of the experimental data processing. EMG1 and EMG2 show the raw sEMG and normalized amplitude signals of biceps brachii and triceps brachii respectively. θ is the joint angle in degree, and ω is the joint angular velocity in degree/sec.

C. Joint Torque Estimation

In this study, we treat the upper limb as two rigid links, and the forearm rotates around the elbow joint, and we ignore the joint damping for simplicity. Then the elbow torques of motion type 1 can be estimated as follows[4] [6]:

$$T = I \cdot \frac{d\omega}{dt} + mgl \sin\theta \tag{1}$$

where θ is the joint angle, ω is the joint angular velocity, I and m are the rotation inertia and mass of the subject's forearm under different loads, and l is the gravity moment arm. As the latter three parameters are subject-dependent and cannot be measured directly, we obtain their estimation values based on the anthropometric parameters of each subject [7], and the results are shown in Table 1.

For motion type 2, the torque estimations are as follows:

$$T = I \cdot \frac{d\omega}{dt} + mgl \cos\theta \tag{2}$$

The joint torques and kinematic data were normalized to their maximal values, and used as the experimental samples together with the EMG amplitude signals.

TABLE I

ANTHROPOMETRIC PARAMETERS.

Subject	A	B	C	D
Body weight, kg	70	60	57	58
Forearm length, cm	37	36	34	33
I at 2 lb load, kg.m^2	0.26	0.23	0.20	0.19
I at 4 lb load, kg.m^2	0.39	0.35	0.31	0.29
m at 2 lb load, kg	2.45	2.23	2.16	2.18
m at 4 lb load, kg	3.35	3.13	3.07	3.09
l at 2 lb load, cm	29.6	29.2	27.8	26.9
l at 4 lb load, cm	31.6	31.2	29.6	28.7

III. ANN Model Development and Results

A. MFNN Development

Figure 3 is the structure of the three-layer feedforward network we used in this study, where the hidden layer is sigmoid and the output layer is linear. The EMG amplitude signals, joint angle, and angular velocity are the input features, and joint torque is the output. The experimental samples of motion type 1 were divided into 3 subsets randomly: the training subset (70%), the validation subset (15%) and the test subset (15%). The network performance function was mean square error (MSE), and the training method was Levenberg-Marquardt backpropagation.

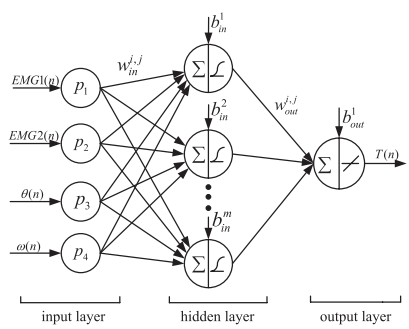

Fig. 3. Structure of the three-layer feedforward network used in the study. n is the current time step, m is the number of the hidden layer, w is the weight, and b is the bias.

The MSE had no obvious decrease when the number of neurons in the hidden layer was set above 25, and the average MSEs across all subjects were: 1.7×10^{-3} (training subset), 2.0×10^{-3} (validation subset), and 2.0×10^{-3} (test subset).

However, EMG-torque relationship is a dynamic process, while MFNN is a static neural network. In order to test the model's generalization performance, we calculated the error autocorrelation which described how the estimation errors were related in time. For a perfect estimation model, there should only be one nonzero value at zero lag (this was the MSE), which means that the estimation errors are completely uncorrelated with each other (white noise). As shown in Fig. 4, there are significant correlations within 0-4 lag (0-200 ms), which means the MFNN model cannot represent this dynamic process, and has large risk of overfitting.

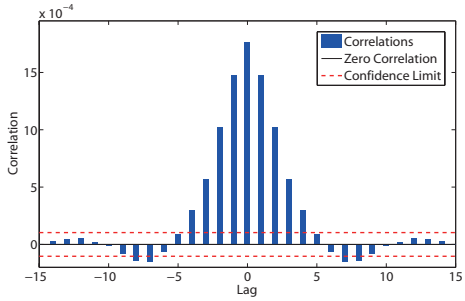

Fig. 4. Error autocorrelation function of the MFNN model (95% confidence limits).

B. TDNN Development

Figure 5 is the structure of the TDNN model used in this study, where the time delay was set to 4, which means all the recent 200 ms EMG signals were used to estimate the joint torque, and the TDNN model worked as a nonlinear moving average (NMA) filter.

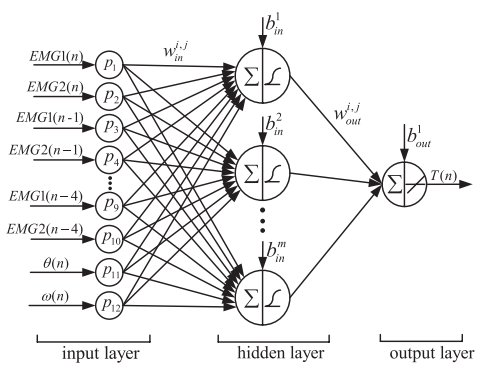

Fig. 5. Structure of the TDNN model used in this study.

After training, the TDNN model had 25 neurons in the hidden layer, and the average MSEs were: 5.2×10^{-4} (training subset), 6.1×10^{-4} (validation subset), and 6.3×10^{-4} (test subset). The error autocorrelation function of the TDNN model is shown in Fig. 6, and the error autocorrelation is small except at 0 lag and 1 lag, which means the TDNN model has less overfitting risk than the MFNN model.

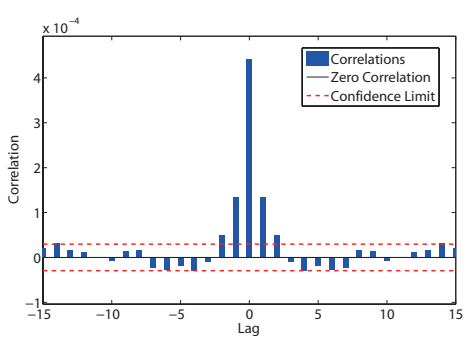

Fig. 6. Error autocorrelation function of the TDNN model.

C. Zero-EMG Test

In order to test the TDNN model, we produced some test samples based on the experimental samples, where the EMG samples were set to zero, and the kinematic features kept unchanged, then we have:

$$T = 0,\ if(EMG1 = 0, EMG2 = 0) \tag{3}$$

where EMG samples were zero, so were the muscle activations and voluntary joint torques. We tested the TDNN model with these new samples, and the result is shown in Fig. 7.

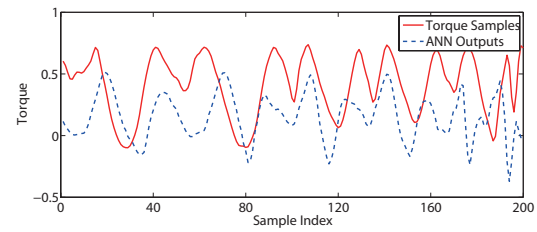

Fig. 7. Zero-EMG test result of the TDNN model trained with the experimental samples.

As shown in Fig. 7, the estimated joint torques are not zero, and has a high correlation with the torque samples. This means the TDNN model is actually part of the inverse joint dynamics, and the deviations in Fig. 7 may attribute to the EMG training samples under different load conditions.

In this study, we generated some zero-EMG samples in which the EMG features and joint torques were zero, and we set 50 different values to the joint angle and angular velocity respectively, both of which were evenly distributed across their ranges. As a result, we had 50×50 zero-EMG samples with different joint angles and angular velocities. Then the TDNN model was trained with both the experimental samples and zero-EMG samples.

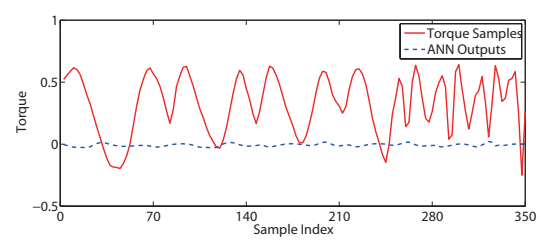

Fig. 8. Zero-EMG test result of the TDNN model trained with both the experimental samples and zero-EMG samples.

After training, the MSEs were 4.3×10^{-4} (training subset), 5.0×10^{-4} (validation subset), and 4.9×10^{-4} (test subset). Then we performed the zero-EMG test as before on this new model, and the torque estimations were almost zero (0.004 ± 0.012) as shown in Fig. 8, and this result accords with condition (3).

D. Single-Muscle Test

Besides the zero-EMG test, we have another special case to test. During the elbow flexion/extension, biceps brachii

produces active torques, and triceps brachii produces negative torques. So for an ideal EMG-torque model, we have

$$\begin{cases} T > 0, \ if\,(EMG1 \neq 0, EMG2 = 0) \\ T < 0, \ if\,(EMG1 = 0, EMG2 \neq 0) \end{cases} \tag{4}$$

In this study, we generated two single-muscle test sample sets based on the experimental samples: 1) EMG2=0, and EMG1 kept unchanged, and 2) EMG1=0, and EMG2 kept unchanged. As the joint torque is the sum of the two muscle's torques, we have:

$$T = T1 + T2 \tag{5}$$

where $T1$ and $T2$ are the estimated torques of biceps brachii and triceps brachii respectively, and T is the net joint torque.

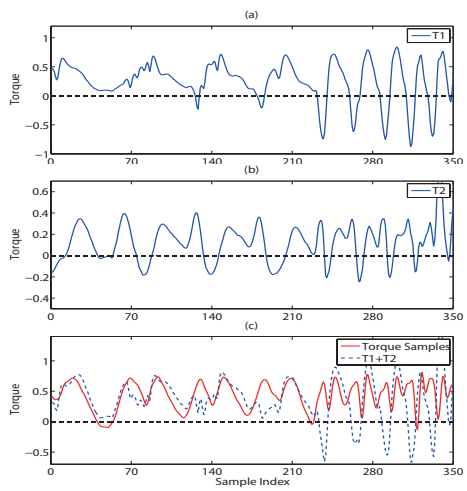

Fig. 9. Single-muscle test result of the TDNN model trained with motion type 1 samples and zero-EMG samples, where (a) is the torque estimation T1, (b) is the torque estimation T2, and (c) is the comparison of toque samples T and T1+T2 .

Then we tested the TDNN model with these sample sets respectively, and the result is shown in Fig. 9. It can be seen from Fig. 9(a) and Fig. 9(b) that, both T1 and T2 have positive and negative values, which is contrary to condition (4). This means the estimated torque directions are incorrect most of the time, and this may cause severe injuries in applications like exoskeleton robot if the robot produced large torques against the human voluntary efforts.

In motion type 1, the gravity torques of the forearm and load keep negative, and biceps brachii activate both in the flexion phase and flexion phase to overcome the gravity torques, while triceps brachii outputs little only in the extension phase. As a result, the voluntary joint torques are positive most of the time, and few negative torque samples exist to indicate the role of triceps brachii.

We trained the TDNN model with the motion type 2 experimental samples as well as the zero-EMG samples. As shown in Fig. 10(a), T1 estimations are positive, and T2 estimations are negative most of the time, and the estimations in wrong directions (T1<0, T2>0) are small in amplitude (0.03±0.01), which accords with condition (4), and the result in Fig. 10(c) accords with condition (5).

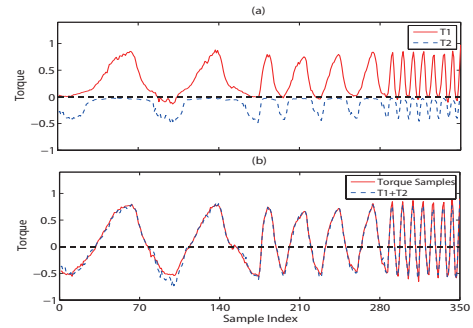

Fig. 10. Single-muscle test result of the TDNN model trained with the motion type 1 samples and zero-EMG samples, where (a) is the estimated torques of T1 and T2, and (b) is the comparison of toque samples T and T1+T2 .

After tuning and testing, the final performance of the TDNN model across subjects is shown in Table 2.

TABLE II

ESTIMATION PERFORMANCE OF THE TDNN MODEL ACROSS ALL SUBJECTS.

		Training set		Test set	
Subject	Torque range N.m	RMSE N.m	Relative error	RMSE N.m	Relative error
A	(-11.5,14.2)	0.46	1.8%	0.59	2.3%
B	(-14.9,17.1)	0.51	2.2%	1.02	3.2%
C	(-13.3,15.8)	0.55	1.9%	0.90	3.1%
D	(-12.8,11.8)	0.89	3.6%	1.45	5.9%
Average	(-13.1,14.7)	0.60±0.20	2.4±0.7%	0.99±0.31	3.6±1.6%

IV. CONCLUSIONS

In this study, a dynamic EMG-torque model for the elbow joint is built based on ANN. TDNN model is proved to have less risk of overfitting than the TDNN model, and zero-EMG random samples are necessary to avoid the influence of kinematic data. Meanwhile, motion types should be chosen carefully to consider different contributions of each muscle.

REFERENCES

[1] T. S. Buchanan, D. G. Lloyd, K. Manal, and T. F. Besier, "Neuromusculoskeletal modeling: Estimation of muscle forces and joint moments and movements from measurements of neural command," *Journal of Applied Biomechanics*, vol. 20, no. 4, pp. 367–395, 2004.

[2] F. E. Zajac, "Muscle and tendon: properties, models, scaling, and application to biomechanics and motor control," *Critical reviews in biomedical engineering*, vol. 17, no. 4, pp. 359–411, 1989.

[3] J.-J. Luh, G.-C. Chang, C.-K. Cheng, J.-S. Lai, and T.-S. Kuo, "Isokinetic elbow joint torques estimation from surface emg and joint kinematic data: using an artificial neural network model," *Journal of Electromyography and Kinesiology*, vol. 9, no. 3, pp. 173–183, 1999.

[4] R. Song and K. Y. Tong, "Using recurrent artificial neural network model to estimate voluntary elbow torque in dynamic situations," *Medical and Biological Engineering and Computing*, vol. 43, no. 4, pp. 473–480, 2005.

[5] T. S. Yoo, S. K. Hong, H. M. Yoon, and S. Park, "Gain-scheduled complementary filter design for a mems based attitude and heading reference system," *Sensors*, vol. 11, no. 4, pp. 3816–3830, 2011.

[6] Y. Koike and M. Kawato, "Estimation of dynamic joint torques and trajectory formation from surface electromyography signals using a neural network model," *Biological Cybernetics*, vol. 73, no. 4, pp. 291–300, 1995.

[7] D. A. Winter, *Biomechanics and Motor Control of Human Movement*. John Wiley & Sons Ltd, 2009.