Vision-based Fuzzy Controller for Quadrotor Tracking a Ground Target

Xuchao Chen[1,a], Zhiqiang Cao[1,b *], Yuequan Yang[2,c] and Chao Zhou[1,d]

[1] State Key Laboratory of Management and Control for Complex Systems,

Institute of Automation, Chinese Academy of Sciences, Beijing 100190, China.

[2] Information Centre, Yangzhou University, Yangzhou, China

[a]chenxuchao2013@ia.ac.cn, [b]zhiqiang.cao@ia.ac.cn, [c]yangyq@yzu.edu.cn, [d]

Keywords: Quadrotor, Vision, Tracking, Image Moments.

Abstract. A vision-based fuzzy controller for a quadrotor is proposed in this paper to realize ground target tracking. Due to the under-actuated property of quadrotors as well as the coupled dynamics in the image plane, it is challenging to design an image-based visual servoing controller for the quadrotor. Since the fuzzy control does not require an accurate model, a fuzzy-based approach is presented to solve the image-based tracking problem. Fuzzy controller takes image moments as inputs and its outputs are used to control the position of quadrotor in a form of tilt angles and vertical velocity adjustment. The proposed approach is verified by experiment.

Introduction

Quadrotors are a typical type of Unmanned Aerial Vehicles (UAV) and have found a wide variety of applications including aerial photography, traffic surveillance and resource exploration [2, 3]. Traditionally, quadrotors employ Inertial Measurement Unit (IMU) and Global Positioning System (GPS) to measure the pose of airframe. The combination of IMU and GPS can provide more reliable pose information [4, 5]. However, GPS signals are not available for some tasks in urban or indoor environment, which leads to unreliable pose measurement. In this case, the introduction of vision provides a method to improve the feedback accuracy [6].

Altug *et al*. presented control methods for quadrotors using visual feedback as the primary sensor [7]. A ground camera is used to estimate the pose of quadrotor. The drawback of this approach is the global vision, which shall limit autonomous flight ability. Carrillo *et al*. estimated the X-Y-Z position of the airframe with respect to a landing pad by an on-board camera [8]. The approaches in [7] and [8] are both position-based visual servoing (PBVS), which is more sensitive to calibration error and image noise than image-based visual servoing (IBVS) [9]. However, because of the nonlinear and under-actuated dynamics of the quadrotors, IBVS approaches for the quadrotor face more challenges. Some research tried to employ model-based technique to realize IBVS for the quadrotor. For instance, Hamel *et al*. [10] and Guenard *et al*. [11] proposed backstepping control laws based on the full dynamics, which integrates the dynamics of image features and quadrotor. Dang *et al*. [12] adopted prediction error minimization method to identify the transfer function as an approximate model, and then a PD controller was designed on the basis of model parameters. Since a precise mathematical model is usually difficult to be obtained, model-based controllers may not be the optimal choice. In this case, fuzzy controller provides an effective solution.

In this paper, a vision-based fuzzy controller is designed to realize ground target tracking for the quadrotor. The rest of this paper is organized as follows. Firstly, the image moments adopted as

image features are introduced. Secondly, a fuzzy-based self-adjusted PD controller is presented. Thirdly, the experimental results are given. Finally, the paper is concluded.

Image Moments

Image moments have been widely used in computer vision [13]. We choose image moments as visual features to control the quadrotor. The image moments m_{ij} of order $i+j$ for a discrete set of N image points are defined by

$$m_{ij} = \sum_{k=1}^{n} x_k^i y_k^j \tag{1}$$

where $[x_k, y_k]^T$ is the coordinate of the kth point in the image plane. While the centered moments are given by

$$\mu_{ij} = \sum_{k=1}^{n} (x_k - x_g)^i (y_k - y_g)^j \tag{2}$$

where $[x_g, y_g]^T$ represents the centroid coordinate, which can be expressed by $x_g=m_{10}/m_{00}$ and $y_g=m_{01}/m_{00}$, respectively.

[14] selected six image moments relative to planar object and deduced their Jacobian matrix. For the purpose of controlling the 3-*D* position of the quadrotor, in this paper, three image features with respect to 3-*D* translational motions are adopted as follows:

$$s_3 = [x_n, y_n, a_n]^T, \tag{3}$$

$$x_n = a_n x_g,\ y_n = a_n y_g,\ a_n = Z^* \sqrt{a^*/a},\ a = \mu_{02} + \mu_{02}. \tag{4}$$

Besides, a^* and Z^* are the desired values of the image moment a and the depth between the camera and target, respectively. Because of the under-actuated property of the quadrotor, the translation in *XY* plane is coupled with the rotation around *X*-axis and *Y*-axis. This phenomenon leads to a complex and couple dynamics of s_3. Therefore, it is of significance to decouple the image moments s_3 from the 2-*D* rotation. Hence, a virtual image plane kept horizontal is introduced. Since the virtual image plane never rotates, the variation of s_3 then only depends on the variation of the 3-*D* position of the quadrotor.

Now, the next problem is to project the image points to the virtual image plane and calculate the corresponding image moments. Let *C* and *V* denote the coordinate frame attached to the image plane and the virtual plane, respectively. The frames C and V have an identical origin located at *O*. The rotation matrix ${}^V R_C$: $C \rightarrow V$ is given by

$${}^V R_C = [Rot(Y,\theta) Rot(X,\varphi)]^T = \begin{bmatrix} \cos\theta & 0 & -\sin\theta \\ \sin\theta\sin\varphi & \cos\varphi & \cos\theta\sin\varphi \\ \sin\theta\cos\varphi & -\sin\varphi & \cos\theta\cos\varphi \end{bmatrix}. \tag{5}$$

For a point whose coordinates in frame *C* and *V* are $P=[X,Y,Z]^T$ and $P_V=[X_V,Y_V,Z_V]^T$, respectively, we have

$$[X_V, Y_V, Z_V]^T = {}^V R_B [X, Y, Z]^T = [r_1 P, r_2 P, r_3 P]^T \tag{6}$$

where r_i denotes the i-th row of matrix ${}^V R_C$. Let $p=[x,y,1]^T$ denote the coordinate of the image point, and $p_V=[x_V,y_V,1]^T$ denote the corresponding point in the virtual image plane. With $p=P/Z$ and $p_V=P_V/Z_V$, we obtain

$$p_V = \frac{1}{Z_V} P_V = \frac{1}{r_3 P}\, {}^V R_C P = \frac{1}{r_3 p}\, {}^V R_C p. \tag{7}$$

According to Eq. 7 and the measurements of ϕ and θ by IMU, the image moments in the virtual image plane can be calculated. On this basis, the quadrotor can be controlled in the virtual image plane without the coupling with the rotational motions. Since the fuzzy logic controller does not require an accurate model, a fuzzy-based approach is designed to solve the vision-based quadrotor tracking problem.

Vision-based Fuzzy Controller

Fig. 1 illustrates the control system, which is mainly composed of fuzzy-based parameter adjusters and PD controllers. By self-adjusting the PD parameters according to fuzzy logic, the robustness of this vision-based controller can be improved. Taken the desired image moments $s_3^*=[x_n^*,y_n^*,a_n^*]^T$ and the real-time image moments $s_3=[x_n,y_n,a_n]^T$ as input, the proposed controller outputs the desire tilted angle $[\varphi^*,\theta^*]^T$ and desired vertical velocity v_z*. Combined with the user-specified yaw angle ψ^*, the desired state $[\varphi^*,\theta^*,\psi^*,v_z^*]^T$ is sent to on-board attitude and vertical velocity control. Finally, the quadrotor changes its 3-D position and follows the target.

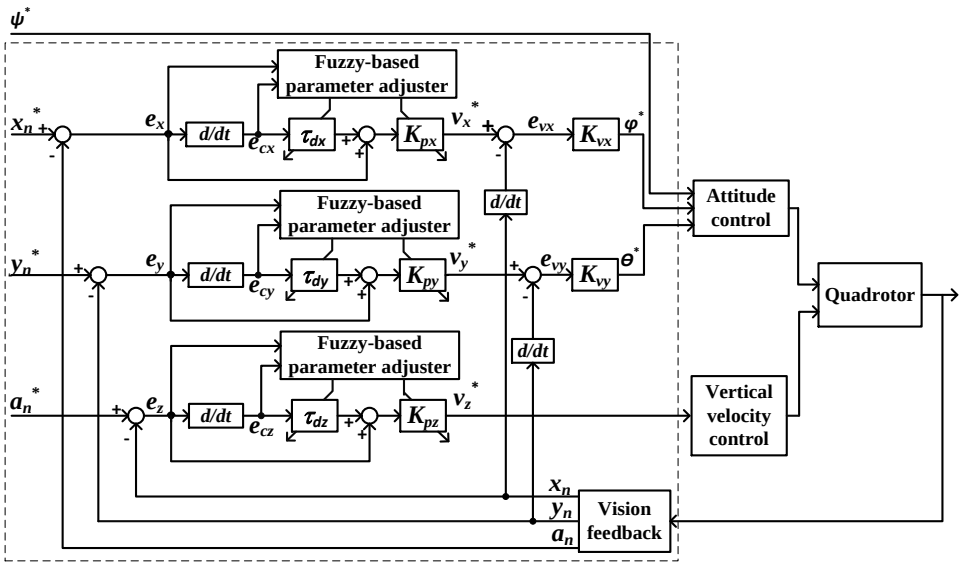

Fig. 1 Vision-based tracking control system block diagram.

Taken axis-X as example, the fuzzy PD controller is introduced as follows. First, the image error and derivative of the error are defined by

$$e_x = x_n^* - x_n,\ e_{cx} = de_x/dt. \tag{8}$$

Based on e_x and e_{cx}, the fuzzy-based adjuster determines the variation of the PD parameters, which are labeled as ΔK_p and $\Delta\tau_d$. Let K_p and τ_d denote the base values, then, the actual values of

the PD parameters is given by

$$K_p = K_p' + \Delta K_p, \;\; \tau_d = \tau_d' + \Delta\tau_d. \tag{9}$$

The fuzzy-based parameter adjuster is shown in Fig. 2.

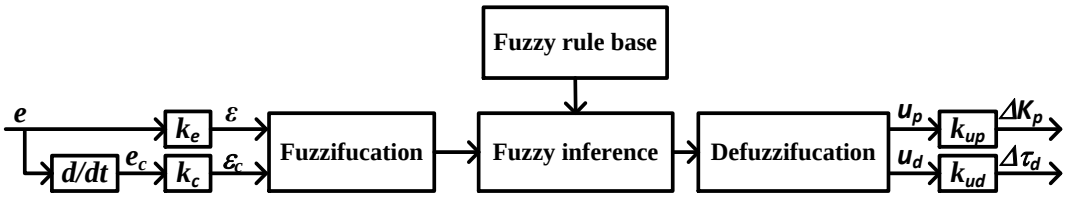

Fig. 2 Fuzzy-based parameter adjuster.

Membership Function Design. The input variables are transformed into the domain of discourse by scaling. The output variables of fuzzy inference are also scaled to obtain the real control outputs. The scaling factor for ε, ε_c, u_p and u_d are k_e, k_c, k_{up} and k_{ud}, respectively. And seven linguistic values for fuzzy variable are adopted as follows:

$$T(\varepsilon) = T(\varepsilon_c) = T(u_p) = T(u_d) = \{NB, NM, NS, ZO, PS, PM, PB\} \tag{10}$$

where NB, NM, NS, ZO, PS, PM, PB are linguistic values, which denote negative large, negative middle, negative small, zero, positive small, positive middle, positive large, respectively. Triangular membership functions with 50% overlap on neighbors are used for ε, ε_c, u_p and u_d (see Fig. 3).

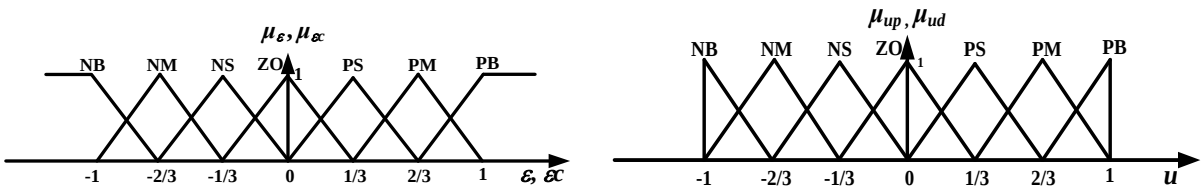

(a) (b)

Fig. 3 (a) Membership function for ε and ε_c. (b) Membership function for u_p and u_d.

Fuzzy Rule Base Design. The rule base reflecting the intelligence of the fuzzy control should be derived based on the experience of controlling the quadrotor. Table 1 gives the rule base.

Table 1 Rule base of the fuzzy logic

ΔK_p , $\Delta\tau_d$		ε						
		NB	***NM***	***NS***	***ZO***	***PS***	***PM***	***PB***
ε_c	***NB***	PB,PS	PM,PS	PS,ZO	PS,ZO	NB,ZO	NM,PB	NS,PB
	NM	PM,NS	PM,NS	PS,NS	ZO,NS	NM,ZO	NS,NS	NS,PM
	NS	PM,NB	PS,NB	ZO,NM	NS,NS	NM,ZO	NS,PS	ZO,PM
	ZO	PS,NB	ZO,NM	NS,NM	NS,NS	NS,ZO	ZO,PS	PS,PM
	PS	ZO,NB	NS,NM	NM,NS	NS,NS	ZO,ZO	PS,PS	PM,PS
	PM	NS,NM	NS,NS	NM,NS	ZO,NS	PS,ZO	PM,PS	PM,PS
	PB	NS,PS	NM,ZO	NB,ZO	PS,ZO	PS,ZO	PM,PB	PB,PB

Defuzzification. Here, the commonly used center of gravity defuzzification is employed: $u = \frac{\sum_{i=1}^{m} b_h \mu_i(E_j, EC_k, U_h, e, ec)}{\sum_{i=1}^{m} \mu_i(E_j, EC_k, U_h, e, ec)}$, where u is the defuzzification output of the fuzzy inference, m is the number of the enabled rules in the rule base, b_h is the membership function center of the fuzzy output linguistic variables, and $\mu_i(E_j, EC_k, U_h, e, ec)$ is the membership value of the ith fuzzy rule by fuzzy reasoning, which is calculated by $\mu_i(E_j, EC_k, U_h, e, ec) = \mu_{E_j}(e) \wedge \mu_{EC_k}(ec) \wedge \mu_{U_h}(u)$.

According to the fuzzy rule base shown in Table 1, the outputs of the fuzzy-based parameter adjuster ΔK_p and $\Delta \tau_d$ can be calculated, and then the self-adjusting of PD controller is realized.

Experimental results

The experimental system is composed of a quadrotor and a ground station. A camera facing downwards is mounted on the quadrotor to detect target and provide vision-based feedback. An image identifier is attached on a mobile vehicle, and an image processing algorithm runs on the ground station to recognize the image identifier and calculate image moments.

The quadrotor is expected to follow this target and keeps right above the target. The desire image moments are $s_3^*=[0,\ 0,\ 2.3]^T$, base values of the PD parameter are $K_{px}'= K_{py}'=1.5$, $\tau_{dx}'=\tau_{dy}'=1.5$, $K_{pz}'=1.5$ and $\tau_{dy}'=0.3$, proportion coefficients of the inner loop in X-axis and Y-axis are $K_{vx}=K_{vy}=2$. $k_e=2$, $k_{ec}=3$, $k_{up}=k_{ud}=0.1$ are adopted for all fuzzy-based parameter adjusters.

Experiment is conducted on the quadrotor while tracking a moving target without prior knowledge of its trajectory. Fig. 4(a) and Fig. 4(b) depict the snapshots of the experiment and the variations of image moments s_3. It can be seen from the result that the image moment a_n is relatively stable, while the fluctuation of image moments x_n and y_n are slightly larger. Nevertheless, image errors are bounded with a reasonable value, and the target is kept in the field of view. This indicates an acceptable tracking error in Cartesian space, which guarantees a successful vision-based moving target tracking for the quadrotor.

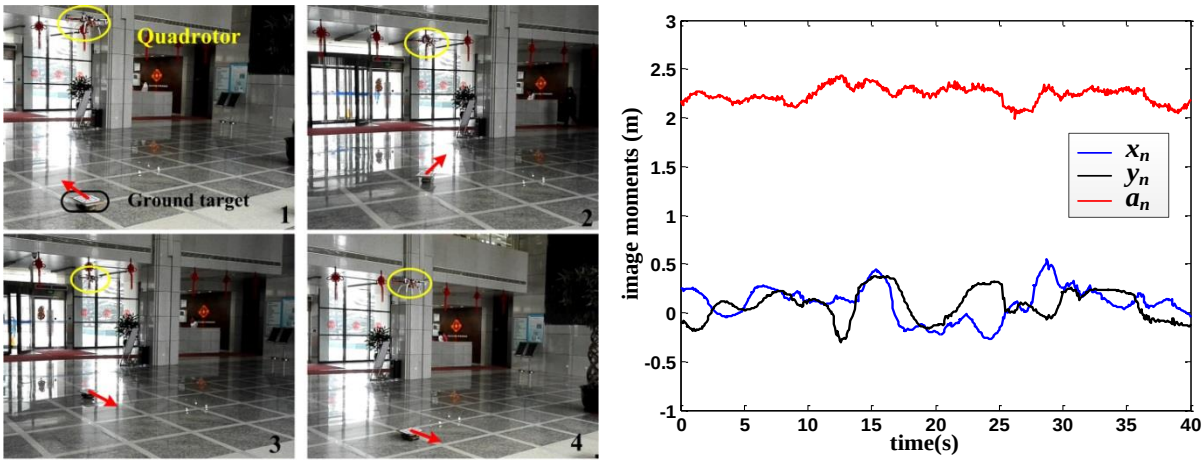

(a) (b)

Fig. 4 Moving target tracking experiment. (a) Snapshots of the experiment. (b) Variations of s_3.

Summary

In this paper, we develop a vision-based fuzzy controller for quadrotor tracking a ground target. Image moments are selected as features for image-based vision control. Furthermore, a virtual image plane is introduced to reduce the coupling in image plane caused by the under-actuated property of the quadrotor. Then, a fuzzy PD controller is designed for vision-based tracking. The

proposed controller self-adjusts PD parameters according to fuzzy logic, which enhances control performance and robustness. The effectiveness of the propose controller is verified by experiment.

Acknowledgements

This work is supported in part by the National Natural Science Foundation of China (61273352, 61473295), and in part by the Beijing National Science Foundation (4152054).

References

[1] G. M. Hoffmann, H. M. Huang, *et al*., Precision flight control for multi-vehicle quadrotor helicopter testbed, Control Engineering Practices. vol. 19, no. 9 (2011) 1023-1036.

[2] A. Tayebi, S. McGilvray, Attitude stabilization of a VTOL quadrotor aircraft, IEEE Transactions on Control Systems Technology. vol. 14, no. 3 (2006) 562-571.

[3] H. Liu, D. Li, Z. Zuo, Y. Zhong, Robust three-loop trajectory tracking control for quadrotors with multiple uncertainties, IEEE Transactions on Industrial Electronics. vol. 63, no. 4 (2016) 2263-2274.

[4] A. Noureldin, T. B. Karamat, M. D. Eberts, A. El-Shafie, Performance enhancement of MEMS-based INS-GPS integration for low-cost navigation applications, IEEE Transactions on Vehicular Technology. vol. 58, no. 3 (2009) 1077-1096.

[5] X. He, Y. Le, W. Xiao, MEMS IMU and two-antenna GPS integration navigation system using interval adaptive Kalman filter, IEEE Aerospace and Electronic Systems Magazine. vol. 28, no. 10 (2013) 22-28.

[6] H. D. Plinval, P. Morin, P. Mouyon, T. Hamel, Visual servoing for underactuated VTOL UAVs: a linear, homography-based framework, International Journal of Robust and Nonlinear Control. vol. 24, no. 16 (2014) 2285-2308.

[7] E. Altug, J. P. Ostrowski, R. Mahony, Control of a quadrotor helicopter using visual feedback, IEEE International Conference on Robotics and Automation. (2002) 72-77.

[8] L. R. G. Carrillo, E. Rondon, A. Sanchez, A. Dzul, R. Lozano, Stabilization and trajectory tracking of a quad-rotor using vision, Journal of Intelligent & Robotic Systems. vol. 61, no. 1-4 (2011) 103-118.

[9] F. Janabi-Sharifi, L. Deng, W. J. Wilson, Comparison of basic visual servoing methods, IEEE/ASME Transactions on Mechatronics. vol. 16, no. 5 (2011) 967-983.

[10] T. Hamel, R. Mahony, Visual servoing of an under-actuated dynamic rigid-body system: an image-based approach, IEEE Transactions on Robotics and Automation. vol. 18, no. 2 (2002) 187-198.

[11] N. Guenard, T. Hamel, Robert Mahony, A practical visual servo control for an unmanned aerial vehicle, IEEE Transactions on Robotics. vol. 24, no. 2, (2008) 331-340.

[12] C. T. Dang, H. T. Pham, T. B. Pham, N. V. Truong, Vision based ground object tracking using AR.Drone quadrotor, International Conference on Control, Automation and Information Sciences. (2013) 146-151.

[13] F. Chaumette, Image moments: a general and useful set of features for visual servoing, IEEE Transactions on Robotics. vol. 20, no. 4 (2004) 713-723.

[14] O. Tahri, F. Chaumette, Point-based and region-based image moments for visual servoing of planar objects. IEEE Transactions on Robotics. vol. 21, no. 6 (2005) 1116-1127.