A Kind of Approach for Aero Engine Gas Path Fault Diagnosis

Qiang Huang[1,2], Guigang Zhang[1,3], Ting Zhang[4], Jian Wang[1,3]

1 Institute of Automation, Chinese Academy of Sciences, Beijing China

2 School of Computer and Control Engineering, University of Chinese Academy of Sciences, Beijing China

3 Shanghai Engineering Research Center of Civil Aircraft Health Monitoring, Shanghai China

4 Dept. of Automatic Control Engineering, Chengdu University of Information Technology, Chengdu China

{huangqiang2014, guigang.zhang, jian.wang }@ia.ac.cn, zt0815@163.com

Corresponding author: Jian Wang

***Abstract*—Support vector machine (SVM) has good generalization performance and is suitable for solving small sample classification problems, so it is often used in the fault diagnosis for aero engine gas path. In this paper, the traditional genetic algorithm and the idea of simulated annealing are combined to optimize the parameters of SVM, and a fault diagnosis method of aero engine gas path based on parameter optimized support vector machine is presented. This method is used to diagnose the aero engine gas path fault to verify the feasibility and effectiveness. The experimental results show that the algorithm can effectively select the parameters of SVM, and ensure the accuracy of fault diagnosis.**

Keywords- genetic algorithm, simulated annealing, SVM, aero engine gas path fault diagnosis

I. INTRODUCTION

There are many faults in aero engine gas path parts, and the maintenance cost is 60% of the total maintenance cost. Therefore, it is very important to diagnose the fault of aero engine gas path to reduce the maintenance cost. The learning of SVM is a convex quadratic optimization problem, and the result is the global optimal solution [1]. SVM is suitable for solving small sample problems because of its excellent generalization ability, which has been used by many experts and scholars to solve the problem of aero engine gas path fault diagnosis [2].

In the engine fault diagnosis, SVM generally adopts the radial basis kernel function, so the penalty factor C and the parameter σ of the radial basis kernel function are two important parameters, which influence the final results of the fault diagnosis. There are many kinds of parameter optimization methods, such as grid search [3], genetic algorithm [4], particle swarm algorithm [5], ant colony algorithm [6] and so on.

Genetic algorithm is a kind of heuristic algorithm with good convergence. It has less computation time and high robustness when the precision is determined. Therefore, the genetic algorithm can be used to optimize the parameter selection of SVM. However, it is easy to precocious in the early stage because the individual fitness difference is big, and it is easy to stagnation in the late stage because the individual fitness difference is small [7].

In this paper, the idea of simulated annealing and genetic algorithm are combined. Through the adaptive stretch of simulated annealing, in the early stage to reduce the differences of individual fitness, the latter to enlarge the differences of individual fitness to highlight outstanding individuals, can effectively solve the defects of genetic algorithms. In this paper, the hybrid algorithm is used to optimize the parameters of SVM, proposes a SVM fault diagnosis method based on parameter optimization. The aero engine gas path fault data is used to verify the feasibility and effectiveness of the algorithm.

II. THE THEORY OF SVM AND GENETIC ALGORITHM

A. The theory of SVM

1) The fundamental principles

The basic idea of SVM is to find the optimal classification hyperplane in the original space when the training examples are linearly separable. When the training examples are not linearly separable in the original space, the kernel function is used to map the sample from a low dimensional space to a high dimensional space, so that the sample can be linearly separable in a high dimensional space and find the optimal hyperplane in a high dimensional space.

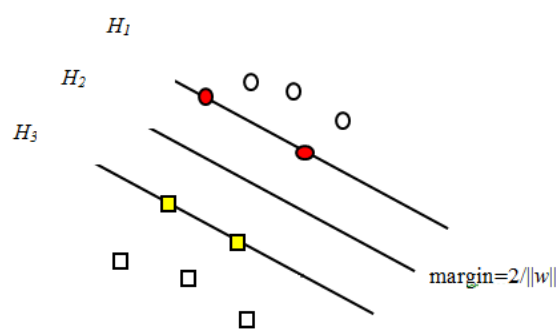

Figure 1. Optimal classification surface

978-1-5090-0382-2/16/$31.00 ©2017 IEEE

As shown above, H_2 is the classification hyperplane with "maximum interval".

Optimal classification hyperplane:

If the classification model is $f(x)=\omega\cdot x+b$, the classification hyperplane is:

$$\omega\cdot x+b=0 \tag{1}$$

Assume the sample set of linearly separable are (x_i, y_i) , $i=1,2,\cdots,m$, $x\in R^d$, $y\in(-1,+1)$. In order to find the optimal classification hyperplane:

$$\begin{aligned}&\max_{\omega,b}\frac{2}{\|\omega\|}\\&s.t.\ y_i\left(\omega\cdot x_i+b\right)\geq 1,\ i=1,2,\cdots,m.\end{aligned} \tag{2}$$

In order to maximize the interval, we should make the $\|\omega\|^{-1}$ maximum, which is equivalent to minimizing the $\|\omega\|^2$. Therefore, the equality (2) can be rewritten as:

$$\begin{aligned}&\min_{\omega,b}\frac{1}{2}\|\omega\|^2\\&s.t.\ y_i\left(\omega\cdot x_i+b\right)\geq 1,\ i=1,2,\cdots,m.\end{aligned} \tag{3}$$

A Lagrange function is applied to solve the (3) optimization problem:

$$L(\omega,b,a)=\frac{1}{2}\left\|\omega^2\right\|-\sum_{i=1}^{m}a_i\left[y_i(\omega\times x_i+b)-1\right] \tag{4}$$

Among them, $a_i>0$ is the Lagrange multiplier, corresponding to the first i sample. At the point of the minimum (with respect to ω and b) one obtains:

$$\begin{aligned}&\frac{\partial L(\omega,b,\alpha)}{\partial\omega}=\left(\omega-\sum_{i=1}^{m}\alpha_i y_i x_i\right)=0\\&\frac{\partial L(\omega,b,\alpha)}{\partial\omega}=\sum_{i=1}^{m}y_i\alpha_i=0\end{aligned} \tag{5}$$

From equality (5) we derive:

$$\begin{aligned}&\omega=\sum_{i=1}^{m}\alpha_i y_i x_i\\&\sum_{i=1}^{m}a_i y_i=0\end{aligned} \tag{6}$$

Substituting (6) into (4) we obtain:

$$\max_{\alpha}=\sum_{i=1}^{m}a_i-\frac{1}{2}\sum_{i,j=1}^{m}a_i a_j y_i y_j(x_i\cdot x_j) \tag{7}$$

Thus, it becomes the problem of optimal solution of a_i^* , which can be solved by the sequential minimal optimization method.

Calculating the optimal bias b^* and the optimal weight vector ω^* :

$$\omega^*=\sum_{i=1}^{m}a_i^* y_i x_i \tag{8}$$

$$b^*=y_i-\sum_{j=1}^{l}y_j a_j^*(x_j\cdot x_i) \tag{9}$$

where $j\in\left\{j\middle|a_j^*>0\right\}$.

It can be concluded that the optimal classification surface is a linear combination of a set of sample vectors, in which $a_i^*\neq 0$ is the support vector.

After solving the dual problem, the decision function is obtained:

$$f(x)=\operatorname{sgn}\left\{\sum_{i=1}^{m}a_i^* y_i(x_i\cdot x)+b^*\right\} \tag{10}$$

When there is noise in the sample, we need to introduce the penalty factor and the slack variable to tolerate a certain misclassification to increase the generalization ability of the model. Therefore, the equality (3) becomes:

$$\begin{aligned}&\min_{\omega,b,\xi}\frac{1}{2}\|\omega\|^2+C\sum_{i=1}^{m}\xi_i\\&s.t.\ y_i\left(\omega\cdot x_i+b\right)\geq 1-\xi_i,\ i=1,2,\cdots,m\\&\quad\xi_i\geq 0,\ i=1,2,\cdots,m\end{aligned} \tag{11}$$

where C is the penalty factor and ξ_i is the slack variable. The problem is still use Lagrange function to solve, so we won't repeat it.

In actual use, the linear inseparable case often appear, at this time we will need to take samples from the low dimensional space to map to a high dimensional space by a nonlinear mapping, and in the high dimensional space to find the optimal classification hyperplane.

Mapping x to a high dimensional space H by φ :

$$x\rightarrow\varphi(x)=\left(\varphi_1(x),\varphi_2(x),\cdots,\varphi_l(x)\right)^T \tag{12}$$

Using $\varphi(x)$ to replace the input vector x to get the optimal classification function:

$$f(x)=\operatorname{sgn}(\omega^*\cdot\varphi(x)+b^*)=\operatorname{sgn}\left(\sum_{i=1}^{l}a_i^* y_i\varphi(x_i)\cdot\varphi(x)+b^*\right) \tag{13}$$

We often use the kernel function to implicitly map the nonlinear function, so the optimal classification function becomes:

$$f(x)=\operatorname{sgn}\left(\sum_{i=1}^{l}a_i^* y_i K\left(x_i,x\right)+b^*\right) \tag{14}$$

2) Introduction of the commonly used kernel functions

The kernel function of SVM makes learning implicitly in the feature space without defining the feature space and mapping function, which is a very important part of the SVM.

At present, the commonly used kernel functions are linear kernel function, polynomial kernel function, radial basis kernel function (RBF) and sigmoid kernel function [8].

The linear kernel function:

$$K(x,z) = x \cdot z + c$$

The polynomial kernel function:

$$K(x,z) = (x \cdot z + 1)^p$$

The radial basis kernel function:

$$K(x,z) = \exp\left(-\sigma \|x - z\|^2\right)$$

The sigmoid kernel function:

$$K(x,z) = \tanh(\alpha x \cdot z + c)$$

3) Multi-class classification algorithms of SVM

The original SVM generally only supports the two classifications, but the aero engine fault diagnosis field is generally several or more kinds of faults. Therefore, some methods should be used to make the SVM adapt to the task of multi classification. At present, the common methods are "one versus one", "one versus many" and "many versus many" [9-10].

The "one versus one" approach combines the N categories in pairs, generating $N(N-1)/2$ classifiers. The final result produced by the all classifiers voting: the category receiving the most votes as the final classification results.

The "one versus many" method uses each class of the sample as the positive class, and all other classes as the negative class, training N classifier. The final result is determined by the classifier that the prediction is positive.

The "many versus many" method uses a number of classes as a positive class, and the rest as a negative class, doing M sub division of the N categories, and training M classifiers. The samples were predicted with each trained classifier. Then the prediction label is encoded. At last, the coding distance between the predicted coding and each class is calculated and the label with minimum distance is the final result.

B. The principle of genetic algorithm

Genetic algorithm is a heuristic search algorithm, which is inspired by Darwin's theory of evolution. The process of genetic algorithm is actually like the evolution of nature. First of all, we look for a "digital" coding scheme for the solution of the problem. Secondly, a random number is used to initialize a population. Thirdly, after an appropriate decoding process, the fitness function is used to evaluate the fitness of each individual gene. Then, we select the best individuals in accordance with some rules. At last, crossover and mutation occur in some individuals until the number of iterations is reached or the stopping condition is met.

Therefore, the general steps of genetic algorithm:

Step1: produce initial population;

Step2: estimate the fitness of each individual in the population;

Step3: according to the degree of adaptability, the individual is selected from the population into the next generation;

Step4: the individuals in the population are crossed to produce the next generation;

Step5: the individuals in the population are mutated;

Step6: repeat Step 2-5 until the stop condition is satisfied;

Step7: output the optimal solution.

III. FAULT DIAGNOSIS BASED ON SUPPORT VECTOR MACHINE

In this paper, the libsvm tool kit ("one versus one") is used to diagnose the fault of aero engine gas path. There are 7200 groups of aero engine gas path fault data, including 12 kinds of faults. The data are derived from the failure simulation of aero engine gas path model, which is shown in Fig 2. There are 6,000 training data and 1,200 test data. The training data is used to train the SVM, and the test data is used to test the fault diagnosis accuracy.

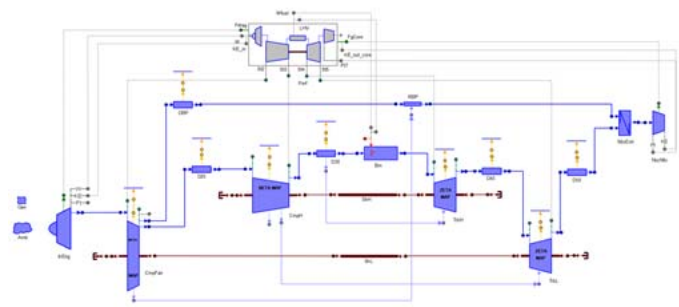

Figure 2. Aero engine gas path model based on PROOSIS

A. Fault diagnosis with basic SVM

In this paper, the RBF kernel function is chosen, so the SVM has two very important parameters, namely the penalty factor C and the parameter σ of the RBF kernel function. Selecting different C and σ, the results are shown in the following table:

TABLE I. FAULT DIAGNOSIS RATE TABLE UNDER DIFFERENT PARAMETERS

C	σ	Diagnostic accuracy
0.1	0.01	85%
1	0.01	88.5%
0.1	0.1	88.3%
0.1	1	81.2%

It can be seen from the table that the choice of different C and σ will lead to different fault diagnosis results, so we need to choose the optimal C and σ.

B. Fault diagnosis with parameter optimized SVM

1) Simulated annealing hybrid genetic algorithm

The simulated annealing hybrid genetic algorithm is used to optimize the parameters of SVM. Firstly, C and σ are encoded, and the correctness of classification is used as the fitness function. Then, the fitness is modified with the simulated annealing, and selection, crossover, mutation were performed with fitness as a guide. Finally, the optimal solution is got. The algorithm flow is shown in Fig 3.

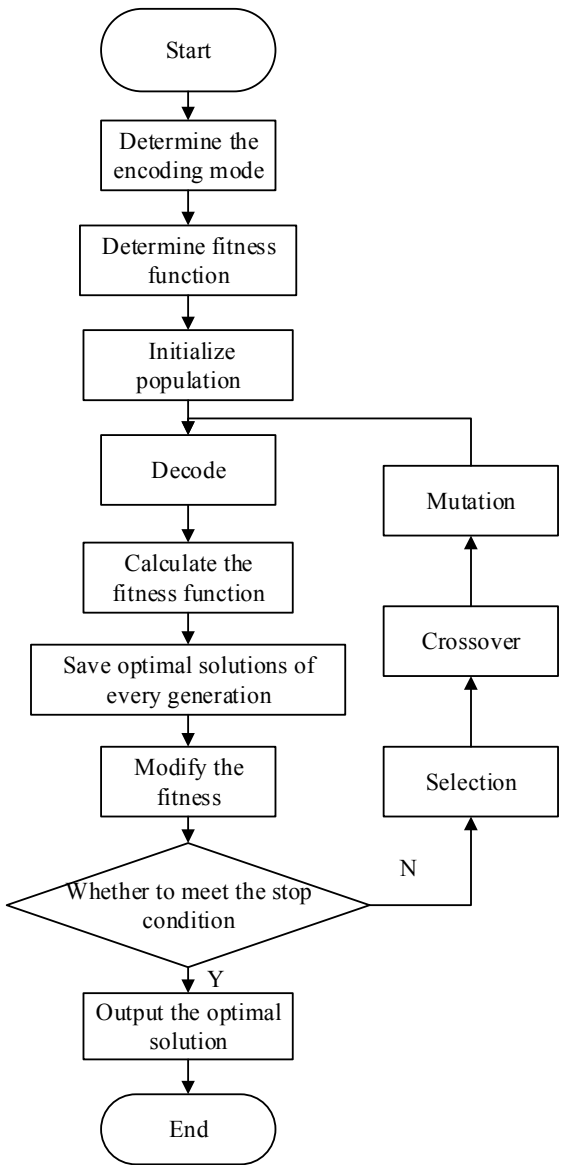

Figure 3. Flow chart of parameter optimization algorithm

In the process of fitness correction, the idea of simulated annealing is adopted. Using $f_i = \dfrac{e^{f_i/T}}{\sum_{i=1}^{M} e^{f_i/T}}$ to modify the fitness, where $T = T_0\left(A^{g-1}\right)$, M is the population size, f_i is the fitness of the first i individual, g is a genetic algebra, T is the temperature, T_0 is the initial temperature, and A is the annealing speed [11]. The fitness scaling process is shown in Table II and Table III:

TABLE II. SIMULATED ANNEALING HYBRID GENETIC ALGORITHM FITNESS SCALING TABLE IN THE EARLY STAGE

Fitness in early stage	Percentage	$e^{f_i/T}$ (T=1)	Percentage
0.40	8%	1.49	9%
0.38	8%	1.47	8%
1.60	32%	4.95	28%
0.40	8%	1.49	9%
0.84	17%	2.31	13%
0.15	3%	1.16	9%
0.48	10%	1.61	9%
0.43	9%	1.54	9%
0.32	6%	1.38	8%

TABLE III. SIMULATED ANNEALING HYBRID GENETIC ALGORITHM FITNESS SCALING TABLE IN THE LATE STAGE

Fitness in late stage	Percentage	$e^{f_i/T}$ (T=0.37)	Percentage
0.89	11%	11.15	11%
0.72	9%	6.93	7%
0.93	12%	12.32	12%
0.91	11%	11.71	12%
0.81	10%	8.95	9%
0.88	11%	10.93	11%
0.93	12%	12.47	13%
0.88	11%	10.93	11%
0.98	12%	14.06	14%

From Table II and Table III, we can see that: in the early stage of genetic algorithm, T is relatively large, reducing the differences between the individual; in the latter stage of the genetic algorithm, T is relatively small, enlarging the difference between the individual enlarged to highlight outstanding individuals. Therefore, the idea of simulated annealing can effectively overcome the defects of genetic algorithm.

2) Parameter optimized SVM with simulated annealing hybrid genetic algorithm

In this paper, we use random traversal sampling in selection process, single point crossover and uniform mutation. The genetic algebra is 100 and the population size is 40. The crossover probability is 0.7 and the mutation probability is 0.01. In order to prevent the loss of the best individual in the current population so that the genetic algorithm can't get the global

optimal solution, this paper uses the elitist strategy to retain the individual of high adaptability without crossover and mutation. Genetic algorithm is used to optimize the parameters, and the results are as follows:

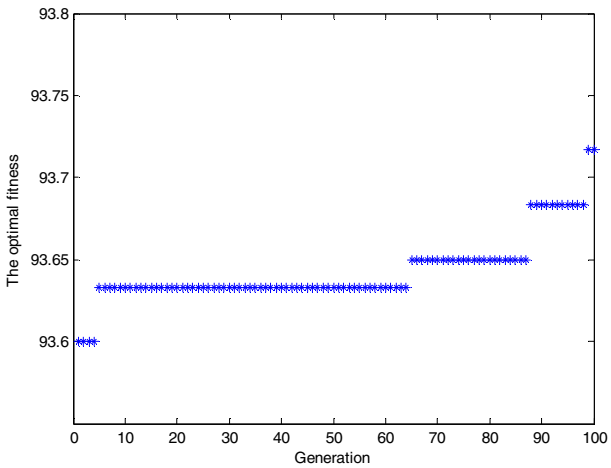

Figure 4. Optimal parameter curve with annealing hybrid genetic algorithm

From Fig 4, we can see the optimal fitness (the correct rate of fault diagnosis) is 93.72%. The optimal parameters obtained by the algorithm are 1.4323(C) and 2.5539(σ).After testing with test data, the accuracy of fault diagnosis is 92%. Therefore, the fault diagnosis method based on parameter optimized SVM combine with the idea of simulated annealing and genetic algorithm can achieve a high accuracy of fault diagnosis.

C. Comparative analysis

The simulated annealing hybrid genetic algorithm and traditional genetic algorithm are used to optimize the parameters of SVM. Running the algorithms 100 times, and taking the average value, the results are as follows:

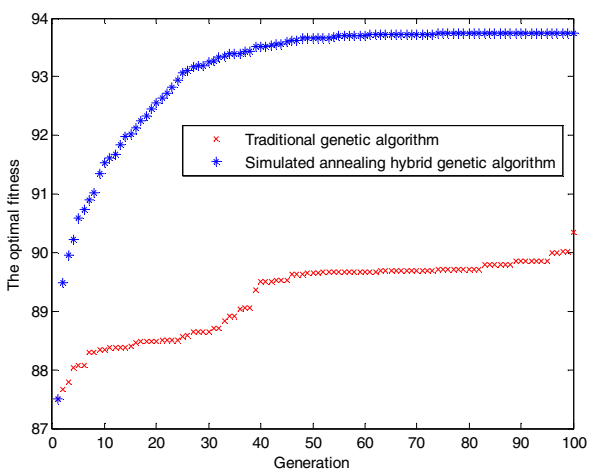

Figure 5. The results of the simulated annealing hybrid genetic algorithm and traditional genetic algorithm

From Fig 5, we can see that the simulated annealing hybrid genetic algorithm has fast convergence speed and better fitness. After testing with test data, the average fault diagnosis accuracy of the SVM models obtained by the simulated annealing hybrid genetic algorithm is 91.7%, while the traditional algorithm is about 89.3%. In general, the final result of the simulated annealing hybrid genetic algorithm is better than the traditional genetic algorithm and it is more suitable to optimize the parameters of SVM.

IV. CONCLUSION

In this paper, we have introduced the theory of SVM and genetic algorithm, presented a fault diagnosis method based on parameter optimized SVM combine with the idea of simulated annealing and genetic algorithm, and verified the effectiveness of the algorithm by the diagnosis of aero engine gas path fault. From the results, we could draw the conclusion that the fault diagnosis method based on parameter optimized SVM combine with the idea of simulated annealing and genetic algorithm can achieve a high accuracy of fault diagnosis. Finally, we hope to see that the method will be applied to the aircraft health management system to achieve fault diagnosis of the whole machine and condition based maintenance.

ACKNOWLEDGE

This research was supported by: (1) Special Project for Civil-Aircraft, MIIT; (2) Fund of Shanghai Engineering Research Center of Civil Aircraft Health Monitoring.

REFERENCE

[1] Vapnik Viladimir N. The Nature of Statistical Learning Theory. Berlin: Springer-Verlag, 1995.

[2] WANG Xiu-yan, LI Cui-fang, Gao Ming-yang. Fault diagnose of areo-engine gas path based on SVM and SNN[J]. Journal of Aerospace Power, 2014, 29(10): 2493-2498.

[3] S. Hafezi, A. H. Moore and P. A. Naylor. Multiple source localization in the spherical harmonic domain using augmented intensity vectors based on grid search[C]// 2016 24th European Signal Processing Conference (EUSIPCO), Budapest, 2016:602-606.

[4] S. P. T. P. Phyu and G. Srijuntongsiri. A binary coded multi-parent genetic algorithm for shuttle bus routing system in a college campus[C]// 2016 International Conference On Advanced Informatics: Concepts, Theory And Application (ICAICTA), Penang, Malaysia, 2016: 1-5.

[5] J. Zhao, G. Chang, L. Han and L. Wang. Flexible neural network adaptive control based on the particle swarm optimization algorithm[C]// 2016 4th International Conference on Cloud Computing and Intelligence Systems (CCIS), Beijing, China, 2016:121-124.

[6] X. Chen, Z. Bo, X. Dong, S. Shi and B. Wang. The optimal circuitous communication route search for pilot protection based on ant colony algorithm[C]// 13th International Conference on Development in Power System Protection 2016 (DPSP), Edinburgh, 2016: 1-5.

[7] PENG yong-gang, LUO Xiao-ping, WEI Wei. New fuzzy adaptive simulated annealing genetic algorithm[J]. Control and Decision, 2009, 24(6): 2494-2498.

[8] Hofmann T, Scholkopf B, Smola AJ. Kernel methods in machine learning. The Annals of Statistics, 2008, 36(3): 1171-1220.

[9] DAI Hong-de, CHENG Ming, LI Juan. Multi-layers sub-support vector machine based fault diagnosis for multi sensors[J], Chinese Journal of Scientific Instrument, 2006, 27(6): 1737-1739.

[10] YU Hui, ZHAO Hui. New research on multi-classification based on Support Vecrot Machine[J], Computer Engineering Application, 2008 ,44(7): 185-189.

[11] XIAO Lian, LI Xing-hai. Research on automatic generating test paper based on simulated annealing genetic algorithm[J], FuJian Computer, 2014, (2): 17-19.